# WPU Wiring Diagram

## Models

3R1C1DR410.230/1/60.DC
5R1C1DR410.230/1/60.DC
7E1C2DR410.230/1/60.DC
9E1C2DR410.230/1/60.DC

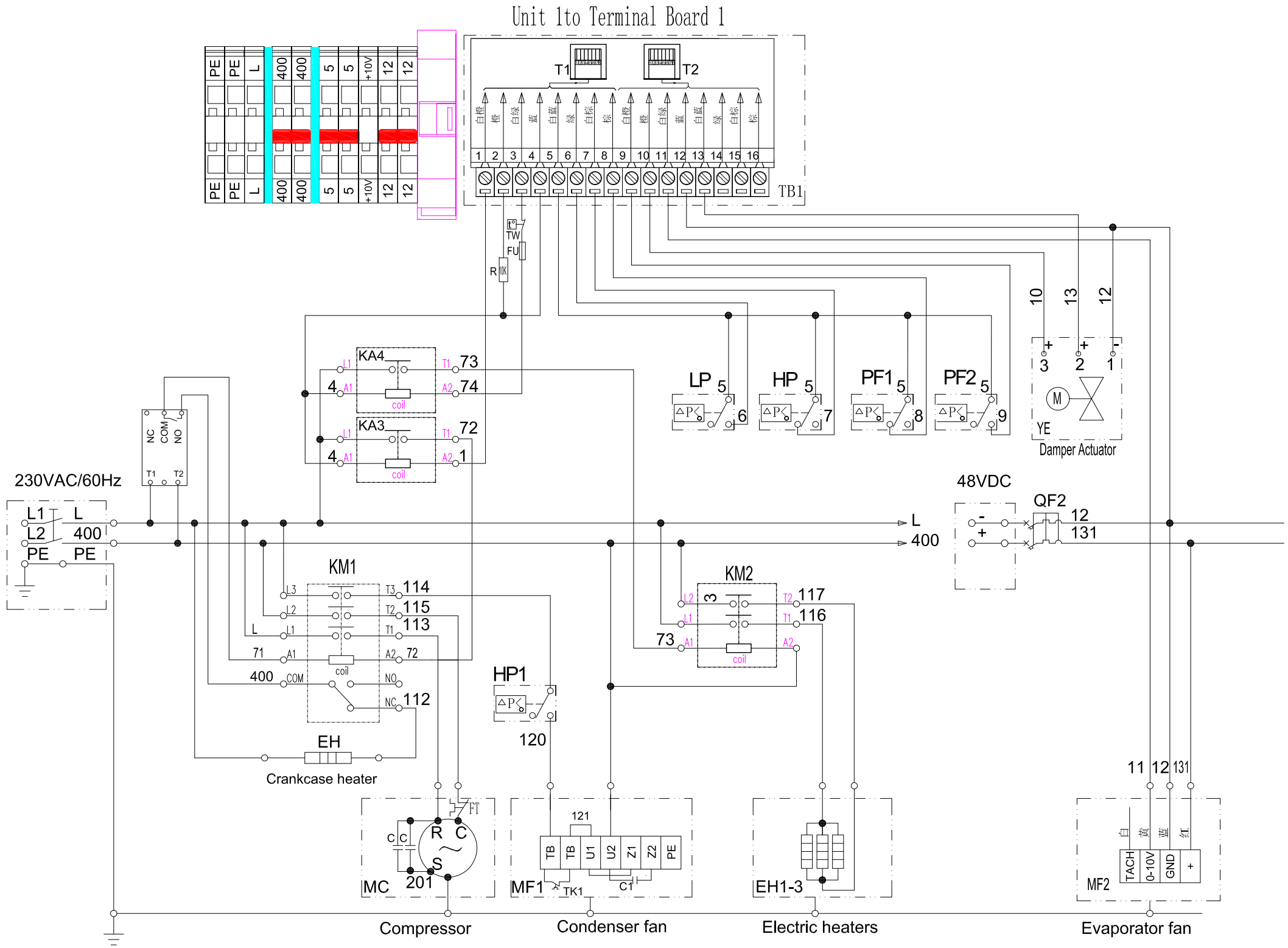


| S.N | Label | Description |
|---|---|---|
| 1 | PF2 | Evaporator fan overload |
| 2 | PV | Brown-out circuit used for compressor protection |
| 3 | KA3 | Compressor pilot relay |
| 4 | KA4 | Heater pilot relay |
| 5 | HP1 | Condenser fan switch |
| 6 | EH1-3 | Electric heaters |
| 7 | EH | Crankcase heater |
| 8 | FU | Thermal fuse for heating |
| 9 | TW | Temperature switch for heating |
| 10 | PF1 | Air pressure differential swtich |
| 11 | C | Start capacitor for compressor |
| 12 | C1 | Capacitor for condenser fan |
| 13 | LP | Low-pressure swtich |
| 14 | HP | High pressure switch |
| 15 | KM2 | Electric heaters AC contactor |
| 16 | KM1 | Compressor AC contactor |
| 17 | MC | Compressor |
| 18 | MF2 | Evaporator fan/Supply fan |
| 19 | MF1 | Condenser fan |
| 20 | FT | Compressor overload |
| 21 | TK1 | Condenser fan overload |
| 22 | YE | Air damper actuator |
| 23 | QF1&QF2 | Breaker |
| 24 | TB1&TB2 | Terminal Board (CAT-5 Connection) |